Name key

CHAPTER 2 REVIEW!
Algebra 2 Trig G

Part I Sketch a graph of the line.

1) $y = -\frac{3}{2}x + 4$

slope $= \frac{-3}{2}$

y-int $= 4$

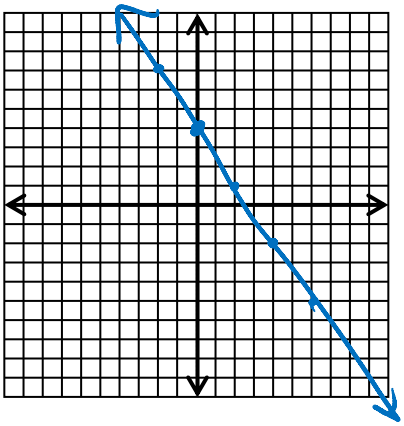

Part II a) Find the domain and range. b) Write "function" or "not a function".

2) $y = x$

function

D: {all real #s}

R: {all real #s}

3)

x	y
-4	0.4
0	3.2
2	1
2	2.3

not a function

D: {-4, 0, 2}

R: {0.4, 3.2, 1, 2.3}

4)

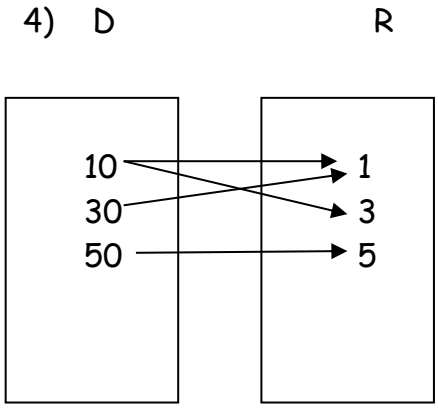

not a function

5)

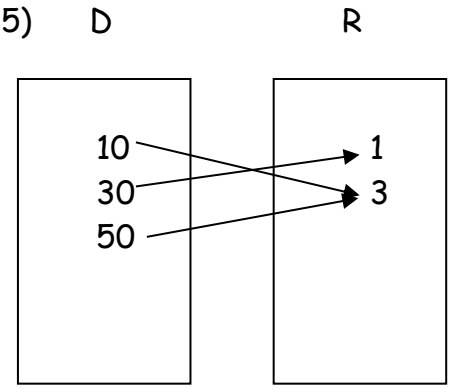

function

Part III Find each value if $f(x) = -x + 4$ and $g(x) = -2x^2$.

6) $f(2a) = \boxed{-2a + 4}$

7) $g(-1) = -2(-1)^2$
$= -2(1)$
$= \boxed{-2}$

8) $f(a-b) = \boxed{-(a-b)+4}$
OR $= \boxed{-a+b+4}$

Part IV Find the slope.

9) (2,–3) (–4,5)

$\frac{-3-5}{2--4} = \frac{-8}{6} = \boxed{\frac{-4}{3}}$

10) (2,1) (2,5)

$\frac{1-5}{2-2} = \frac{-4}{0} = \boxed{\emptyset}$

(vertical)

11) (–3,1) (4,1)

$\frac{1-1}{-3-4} = \frac{0}{-7} = \boxed{0}$

(horizontal)

Part V Graph each line.

14) passes thru $(-1,2)$ and parallel to a line with slope $\boxed{m=3}$

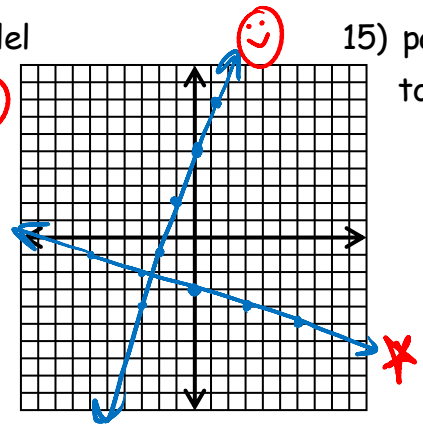

15) passes thru $(0,-3)$ and perpendicular to a line with slope $m=3$

$\boxed{m=\frac{-1}{3}}$

Part VI Write an equation of the line with the given information.

16) $m=-3$ and thru $(-5,0)$

$0=-3(-5)+b$

$0=15+b$

$-15=b$

$\boxed{y=-3x-15}$

17) $m=-\frac{2}{5}$ and thru $(-3,-1)$

$-1=\frac{-2}{5}(-3)+b$

$-1=1.2+b$

$-2.2=b$

$\boxed{y=\frac{-2}{5}x-2.2}$

18) (horiz) $m=0$ and thru $(6,-2)$

$\boxed{y=-2}$

19) slope is (vert) undefined and thru $(-2,8)$

$\boxed{x=-2}$

20) parallel to $y=2x+5$ $m=2$ and thru $(-1,4)$

$4=2(-1)+b$

$4=-2+b$

$6=b$

$\boxed{y=2x+6}$

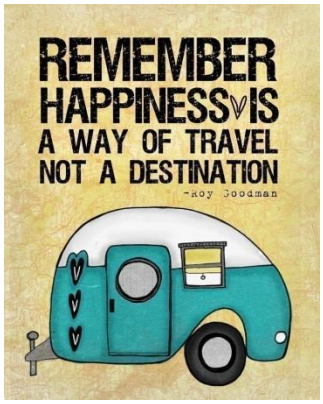

21) perpendicular to $y=-\frac{3}{5}x+7$ $m=\frac{5}{3}$ and thru $(9,-8)$

$-8=\frac{5}{3}(9)+b$

$-8=15+b$

$-23=b$

$\boxed{y=\frac{5}{3}x-23}$

Part VII Writing and working with linear regression equations.

22) Distance from school and times it takes to get there-

Distance (miles)	Time (minutes)
2.3	5
2.8	7
4.2	10
4.9	15
6.0	19
13.5	30

a) EQUATION: $y = 2.1799x + 2.0893$

b) How long would it take someone who was 7.5 miles from school? $(x = 7.5)$ $\approx$ $\boxed{18.44 \text{ minutes}}$

c) If it takes you 45 minutes to get to school, how far away do you live? $(y = 45)$ $\boxed{19.68 \text{ miles}}$

Part VIII Graphing inequalities

23) $y \geq -6 + \frac{3}{2}x$ Solid, above

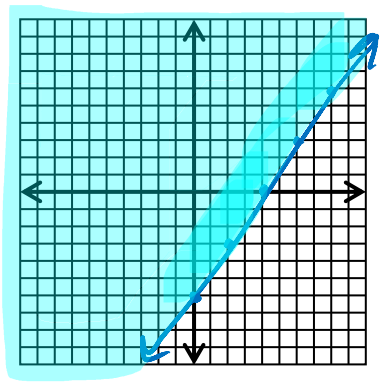

24) $8x + 2y < -2$

$2y < -2 - 8x$

$\boxed{y < -1 - 4x}$ dashed, below

$\boxed{y \geq -8 + 3x}$ solid, above

Solution region